International Tables for Crystallography (2006). Vol. A, Space group 9, pp. 152–155.

Cc C_s^4 m Monoclinic

No. 9 $C1c1$ Patterson symmetry $C12/m1$

UNIQUE AXIS b, CELL CHOICE 1

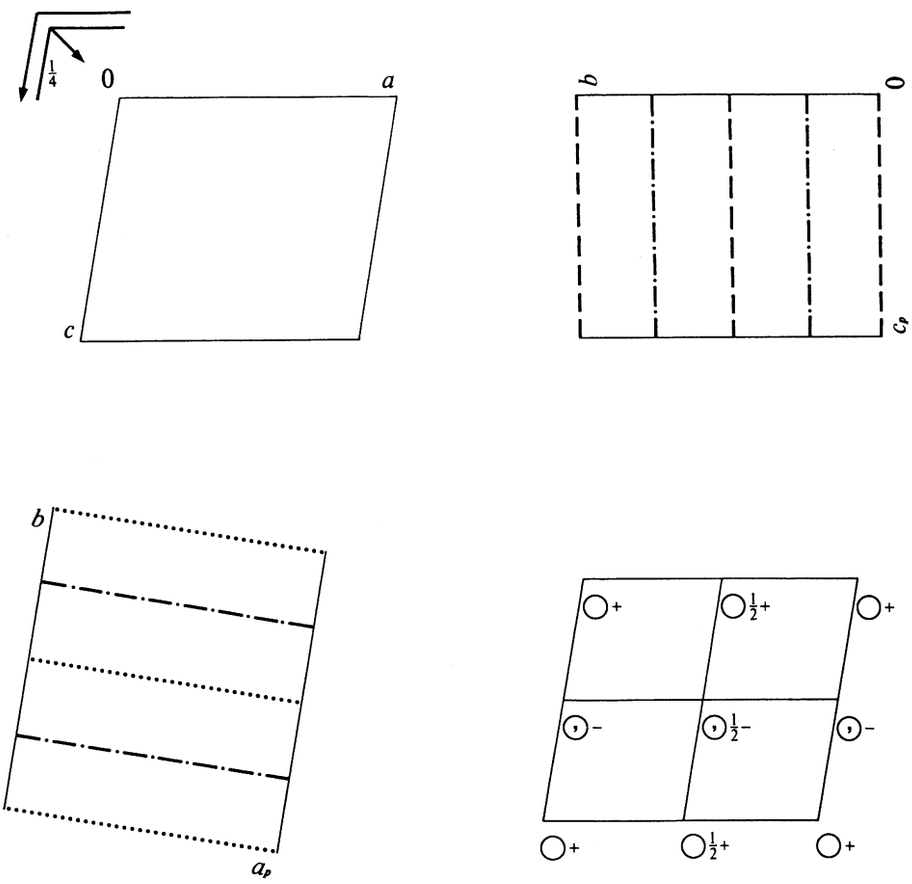

Origin on glide plane c

Asymmetric unit $0 \le x \le 1;\quad 0 \le y \le \frac{1}{4};\quad 0 \le z \le 1$

Symmetry operations

For $(0,0,0)+$ set

(1) 1 (2) $c \quad x,0,z$

For $(\frac{1}{2},\frac{1}{2},0)+$ set

(1) $t(\frac{1}{2},\frac{1}{2},0)$ (2) $n(\frac{1}{2},0,\frac{1}{2}) \quad x,\frac{1}{4},z$

Copyright © 2006 International Union of Crystallography

Generators selected (1); $t(1,0,0)$; $t(0,1,0)$; $t(0,0,1)$; $t(\frac{1}{2},\frac{1}{2},0)$; (2)

Positions

Multiplicity, Wyckoff letter, Site symmetry			Coordinates		Reflection conditions
			$(0,0,0)+$	$(\frac{1}{2},\frac{1}{2},0)+$	General:
4	a	1	(1) x,y,z	(2) $x,\bar{y},z+\frac{1}{2}$	hkl : $h+k=2n$ $h0l$: $h,l=2n$ $0kl$: $k=2n$ $hk0$: $h+k=2n$ $0k0$: $k=2n$ $h00$: $h=2n$ $00l$: $l=2n$

Symmetry of special projections

Along [001] $c1 1m$
$\mathbf{a}'=\mathbf{a}_p$ $\mathbf{b}'=\mathbf{b}$
Origin at $0,0,z$

Along [100] $p1g1$
$\mathbf{a}'=\frac{1}{2}\mathbf{b}$ $\mathbf{b}'=\mathbf{c}_p$
Origin at $x,0,0$

Along [010] $p1$
$\mathbf{a}'=\frac{1}{2}\mathbf{c}$ $\mathbf{b}'=\frac{1}{2}\mathbf{a}$
Origin at $0,y,0$

Maximal non-isomorphic subgroups

I [2] $C1$ ($P1$, 1) 1+

IIa [2] $P1c1$ (Pc, 7) 1; 2
[2] $P1n1$ (Pc, 7) 1; $2+(\frac{1}{2},\frac{1}{2},0)$

IIb none

Maximal isomorphic subgroups of lowest index

IIc [3] $C1c1$ ($\mathbf{b}'=3\mathbf{b}$) (Cc, 9); [3] $C1c1$ ($\mathbf{c}'=3\mathbf{c}$) (Cc, 9); [3] $C1c1$ ($\mathbf{a}'=3\mathbf{a}$ or $\mathbf{a}'=3\mathbf{a},\mathbf{c}'=-\mathbf{a}+\mathbf{c}$ or $\mathbf{a}'=3\mathbf{a},\mathbf{c}'=\mathbf{a}+\mathbf{c}$) ($Cc$, 9)

Minimal non-isomorphic supergroups

I [2] $C2/c$ (15); [2] $Cmc2_1$ (36); [2] $Ccc2$ (37); [2] $Ama2$ (40); [2] $Aea2$ (41); [2] $Fdd2$ (43); [2] $Iba2$ (45); [2] $Ima2$ (46); [3] $P3c1$ (158); [3] $P31c$ (159); [3] $R3c$ (161)

II [2] $F1m1$ (Cm, 8); [2] $C1m1$ ($\mathbf{c}'=\frac{1}{2}\mathbf{c}$) ($Cm$, 8); [2] $P1c1$ ($\mathbf{a}'=\frac{1}{2}\mathbf{a},\mathbf{b}'=\frac{1}{2}\mathbf{b}$) ($Pc$, 7)

Cc $\quad C_s^4$ $\quad m$ $\quad$ Monoclinic

No. 9

UNIQUE AXIS b, DIFFERENT CELL CHOICES

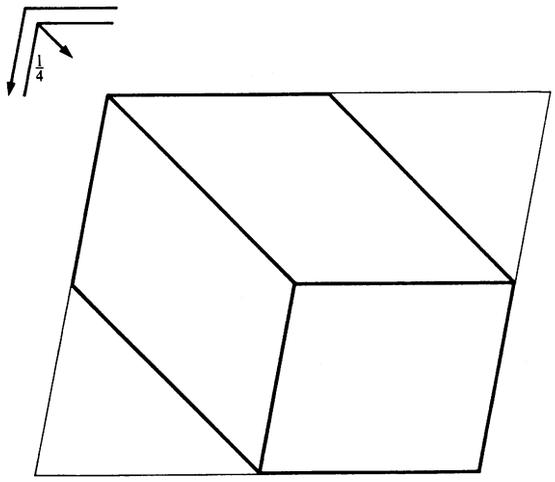

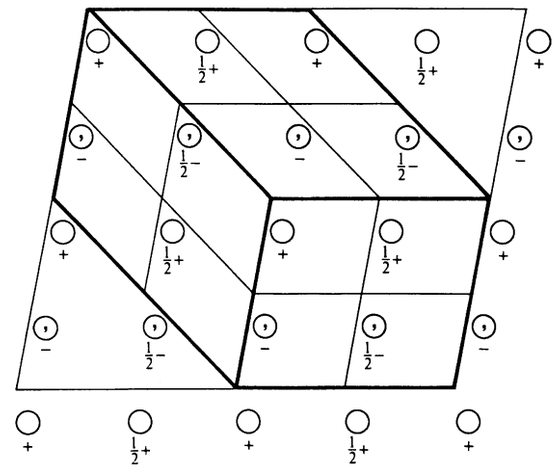

$C1c1$

UNIQUE AXIS b, CELL CHOICE 1

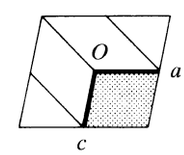

Origin on glide plane c

Asymmetric unit $\quad 0 \le x \le 1; \quad 0 \le y \le \frac{1}{4}; \quad 0 \le z \le 1$

Generators selected $\quad (1);\ t(1,0,0);\ t(0,1,0);\ t(0,0,1);\ t(\frac{1}{2},\frac{1}{2},0);\ (2)$

Positions

Multiplicity, Wyckoff letter, Site symmetry			Coordinates		Reflection conditions
			$(0,0,0)+$	$(\frac{1}{2},\frac{1}{2},0)+$	General:
4	a	1	(1) x,y,z	(2) $x,\bar{y},z+\frac{1}{2}$	hkl : $h+k=2n$
					$h0l$: $h,l=2n$
					$0kl$: $k=2n$
					$hk0$: $h+k=2n$
					$0k0$: $k=2n$
					$h00$: $h=2n$
					$00l$: $l=2n$

$A1n1$

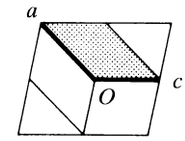

UNIQUE AXIS b, CELL CHOICE 2

Origin on glide plane n

Asymmetric unit $0 \le x \le 1;\quad 0 \le y \le \frac{1}{4};\quad 0 \le z \le 1$

Generators selected (1); $t(1,0,0)$; $t(0,1,0)$; $t(0,0,1)$; $t(0,\frac{1}{2},\frac{1}{2})$; (2)

Positions

Multiplicity, Wyckoff letter, Site symmetry			Coordinates	
			$(0,0,0)+$	$(0,\frac{1}{2},\frac{1}{2})+$
4	a	1	(1) x,y,z	(2) $x+\frac{1}{2},\bar{y},z+\frac{1}{2}$

Reflection conditions

General:

hkl : $k+l=2n$
$h0l$: $h,l=2n$
$0kl$: $k+l=2n$
$hk0$: $k=2n$
$0k0$: $k=2n$
$h00$: $h=2n$
$00l$: $l=2n$

$I1a1$

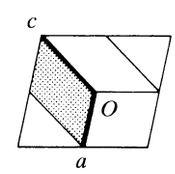

UNIQUE AXIS b, CELL CHOICE 3

Origin on glide plane a

Asymmetric unit $0 \le x \le 1;\quad 0 \le y \le \frac{1}{4};\quad 0 \le z \le 1$

Generators selected (1); $t(1,0,0)$; $t(0,1,0)$; $t(0,0,1)$; $t(\frac{1}{2},\frac{1}{2},\frac{1}{2})$; (2)

Positions

Multiplicity, Wyckoff letter, Site symmetry			Coordinates	
			$(0,0,0)+$	$(\frac{1}{2},\frac{1}{2},\frac{1}{2})+$
4	a	1	(1) x,y,z	(2) $x+\frac{1}{2},\bar{y},z$

Reflection conditions

General:

hkl : $h+k+l=2n$
$h0l$: $h,l=2n$
$0kl$: $k+l=2n$
$hk0$: $h+k=2n$
$0k0$: $k=2n$
$h00$: $h=2n$
$00l$: $l=2n$