*International Tables for Crystallography* (2006). Vol. A, Space group 138, pp. 474–475.

# $P4_2/ncm$ $\quad D_{4h}^{16}$ $\quad 4/mmm$ $\quad$ Tetragonal

## No. 138 $\quad P\ 4_2/n\ 2_1/c\ 2/m$ $\quad$ Patterson symmetry $P4/mmm$

ORIGIN CHOICE 1

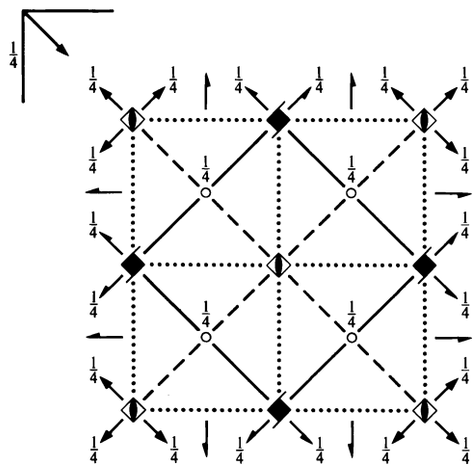

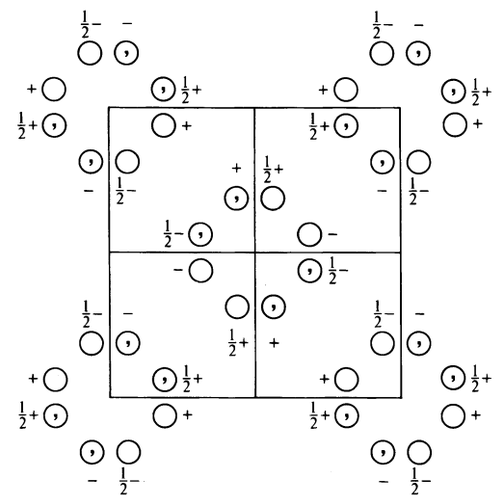

**Origin** at $\bar{4}cg$, at $-\frac{1}{4},\frac{1}{4},-\frac{1}{4}$ from centre $(2/m)$

**Asymmetric unit** $\quad 0 \le x \le \frac{1}{4};\quad 0 \le y \le \frac{1}{2};\quad 0 \le z \le 1;\quad x \le y;\quad y \le \frac{1}{2} - x$

**Symmetry operations**

| | | | |
|---|---|---|---|
| (1) $1$ | (2) $2\quad 0,0,z$ | (3) $4^+(0,0,\frac{1}{2})\quad 0,\frac{1}{2},z$ | (4) $4^-(0,0,\frac{1}{2})\quad \frac{1}{2},0,z$ |
| (5) $2(0,\frac{1}{2},0)\quad \frac{1}{4},y,0$ | (6) $2(\frac{1}{2},0,0)\quad x,\frac{1}{4},0$ | (7) $2\quad x,x,\frac{1}{4}$ | (8) $2\quad x,\bar{x},\frac{1}{4}$ |
| (9) $\bar{1}\quad \frac{1}{4},\frac{1}{4},\frac{1}{4}$ | (10) $n(\frac{1}{2},\frac{1}{2},0)\quad x,y,\frac{1}{4}$ | (11) $\bar{4}^+\ 0,0,z;\ 0,0,0$ | (12) $\bar{4}^-\ 0,0,z;\ 0,0,0$ |
| (13) $c\quad x,0,z$ | (14) $c\quad 0,y,z$ | (15) $m\quad x+\frac{1}{2},\bar{x},z$ | (16) $g(\frac{1}{2},\frac{1}{2},0)\quad x,x,z$ |

Copyright © 2006 International Union of Crystallography

**Generators selected** (1); $t(1,0,0)$; $t(0,1,0)$; $t(0,0,1)$; (2); (3); (5); (9)

**Positions**

| Multiplicity, Wyckoff letter, Site symmetry | | | Coordinates | | | | Reflection conditions |
|---|---|---|---|---|---|---|---|
| | | | | | | | General: |
| 16 | $j$ | 1 | (1) $x,y,z$ | (2) $\bar{x},\bar{y},z$ | (3) $\bar{y}+\frac{1}{2},x+\frac{1}{2},z+\frac{1}{2}$ | (4) $y+\frac{1}{2},\bar{x}+\frac{1}{2},z+\frac{1}{2}$ | $hk0$ : $h+k=2n$ |
| | | | (5) $\bar{x}+\frac{1}{2},y+\frac{1}{2},\bar{z}$ | (6) $x+\frac{1}{2},\bar{y}+\frac{1}{2},\bar{z}$ | (7) $y,x,\bar{z}+\frac{1}{2}$ | (8) $\bar{y},\bar{x},\bar{z}+\frac{1}{2}$ | $0kl$ : $l=2n$ |
| | | | (9) $\bar{x}+\frac{1}{2},\bar{y}+\frac{1}{2},\bar{z}+\frac{1}{2}$ | (10) $x+\frac{1}{2},y+\frac{1}{2},\bar{z}+\frac{1}{2}$ | (11) $y,\bar{x},\bar{z}$ | (12) $\bar{y},x,\bar{z}$ | $00l$ : $l=2n$ |
| | | | (13) $x,\bar{y},z+\frac{1}{2}$ | (14) $\bar{x},y,z+\frac{1}{2}$ | (15) $\bar{y}+\frac{1}{2},\bar{x}+\frac{1}{2},z$ | (16) $y+\frac{1}{2},x+\frac{1}{2},z$ | $h00$ : $h=2n$ |
| | | | | | | | Special: as above, plus |
| 8 | $i$ | $..m$ | $x,x+\frac{1}{2},z$ | $\bar{x},\bar{x}+\frac{1}{2},z$ | $\bar{x},x+\frac{1}{2},z+\frac{1}{2}$ | $x,\bar{x}+\frac{1}{2},z+\frac{1}{2}$ | no extra conditions |
| | | | $\bar{x}+\frac{1}{2},x,\bar{z}$ | $x+\frac{1}{2},\bar{x},\bar{z}$ | $x+\frac{1}{2},x,\bar{z}+\frac{1}{2}$ | $\bar{x}+\frac{1}{2},\bar{x},\bar{z}+\frac{1}{2}$ | |
| 8 | $h$ | $..2$ | $x,x,\frac{3}{4}$ | $\bar{x},\bar{x},\frac{3}{4}$ | $\bar{x}+\frac{1}{2},x+\frac{1}{2},\frac{1}{4}$ | $x+\frac{1}{2},\bar{x}+\frac{1}{2},\frac{1}{4}$ | $hkl$ : $h+k=2n$ |
| | | | $\bar{x}+\frac{1}{2},\bar{x}+\frac{1}{2},\frac{3}{4}$ | $x+\frac{1}{2},x+\frac{1}{2},\frac{3}{4}$ | $x,\bar{x},\frac{1}{4}$ | $\bar{x},x,\frac{1}{4}$ | |
| 8 | $g$ | $..2$ | $x,x,\frac{1}{4}$ | $\bar{x},\bar{x},\frac{1}{4}$ | $\bar{x}+\frac{1}{2},x+\frac{1}{2},\frac{3}{4}$ | $x+\frac{1}{2},\bar{x}+\frac{1}{2},\frac{3}{4}$ | $hkl$ : $h+k=2n$ |
| | | | $\bar{x}+\frac{1}{2},\bar{x}+\frac{1}{2},\frac{1}{4}$ | $x+\frac{1}{2},x+\frac{1}{2},\frac{1}{4}$ | $x,\bar{x},\frac{3}{4}$ | $\bar{x},x,\frac{3}{4}$ | |
| 8 | $f$ | $2..$ | $0,0,z$ | $\frac{1}{2},\frac{1}{2},z+\frac{1}{2}$ | $\frac{1}{2},\frac{1}{2},\bar{z}$ | $0,0,\bar{z}+\frac{1}{2}$ | $hkl$ : $h+k,l=2n$ |
| | | | $\frac{1}{2},\frac{1}{2},\bar{z}+\frac{1}{2}$ | $0,0,\bar{z}$ | $0,0,z+\frac{1}{2}$ | $\frac{1}{2},\frac{1}{2},z$ | |
| 4 | $e$ | $2.mm$ | $0,\frac{1}{2},z$ | $0,\frac{1}{2},z+\frac{1}{2}$ | $\frac{1}{2},0,\bar{z}$ | $\frac{1}{2},0,\bar{z}+\frac{1}{2}$ | $hkl$ : $l=2n$ |
| 4 | $d$ | $..2/m$ | $\frac{1}{4},\frac{1}{4},\frac{3}{4}$ | $\frac{3}{4},\frac{3}{4},\frac{3}{4}$ | $\frac{1}{4},\frac{3}{4},\frac{1}{4}$ | $\frac{3}{4},\frac{1}{4},\frac{1}{4}$ | $hkl$ : $h+k,h+l,k+l=2n$ |
| 4 | $c$ | $..2/m$ | $\frac{1}{4},\frac{1}{4},\frac{1}{4}$ | $\frac{3}{4},\frac{3}{4},\frac{1}{4}$ | $\frac{1}{4},\frac{3}{4},\frac{3}{4}$ | $\frac{3}{4},\frac{1}{4},\frac{3}{4}$ | $hkl$ : $h+k,h+l,k+l=2n$ |
| 4 | $b$ | $\bar{4}..$ | $0,0,0$ | $\frac{1}{2},\frac{1}{2},\frac{1}{2}$ | $\frac{1}{2},\frac{1}{2},0$ | $0,0,\frac{1}{2}$ | $hkl$ : $h+k,l=2n$ |
| 4 | $a$ | $2.22$ | $0,0,\frac{1}{4}$ | $\frac{1}{2},\frac{1}{2},\frac{3}{4}$ | $\frac{1}{2},\frac{1}{2},\frac{1}{4}$ | $0,0,\frac{3}{4}$ | $hkl$ : $h+k,l=2n$ |

**Symmetry of special projections**

Along [001] $p4mm$
$\mathbf{a}'=\frac{1}{2}(\mathbf{a}-\mathbf{b})$ $\mathbf{b}'=\frac{1}{2}(\mathbf{a}+\mathbf{b})$
Origin at $0,0,z$

Along [100] $p2mg$
$\mathbf{a}'=\mathbf{b}$ $\mathbf{b}'=\frac{1}{2}\mathbf{c}$
Origin at $x,\frac{1}{4},0$

Along [110] $p2mm$
$\mathbf{a}'=\frac{1}{2}(-\mathbf{a}+\mathbf{b})$ $\mathbf{b}'=\mathbf{c}$
Origin at $x,x,\frac{1}{4}$

**Maximal non-isomorphic subgroups**

**I** [2] $P\bar{4}c2$ (116) 1; 2; 7; 8; 11; 12; 13; 14
[2] $P\bar{4}2_1m$ (113) 1; 2; 5; 6; 11; 12; 15; 16
[2] $P4_2cm$ (101) 1; 2; 3; 4; 13; 14; 15; 16
[2] $P4_22_12$ (94) 1; 2; 3; 4; 5; 6; 7; 8
[2] $P4_2/n11$ ($P4_2/n$, 86) 1; 2; 3; 4; 9; 10; 11; 12
[2] $P2/n12/m$ ($Cmme$, 67) 1; 2; 7; 8; 9; 10; 15; 16
[2] $P2/n2_1/c1$ ($Pccn$, 56) 1; 2; 5; 6; 9; 10; 13; 14

**IIa** none

**IIb** none

**Maximal isomorphic subgroups of lowest index**

**IIc** [3] $P4_2/ncm$ ($\mathbf{c}'=3\mathbf{c}$) (138); [9] $P4_2/ncm$ ($\mathbf{a}'=3\mathbf{a},\mathbf{b}'=3\mathbf{b}$) (138)

**Minimal non-isomorphic supergroups**

**I** none

**II** [2] $C4_2/mcm$ ($P4_2/mmc$, 131); [2] $I4/mcm$ (140); [2] $P4/nmm$ ($\mathbf{c}'=\frac{1}{2}\mathbf{c}$) (129)