International Tables for Crystallography (2006). Vol. C, Figure 5.3.2.4, p. 514.

high (Glass & Moudy, 1974). A correction for displacement of the conics due to wafer thickness t is necessary in the case when the intersection lies along the normal to the specimen surface. One triple intersection allows the determination of the lattice parameter of a cubic crystal, but for a structure in the orthorhombic system three such intersections would be required.

Two intersecting Kossel lines sometimes form a *lens configuration* (Fig. 5.3.2.4*a*). The use of such a figure, consisting of two lenses (Fig. 5.3.2.4*b*) owing to the resolved doublet of $K\alpha_1$ and $K\alpha_2$ (or $K\beta$) radiation, makes it possible to determine lattice parameters without a knowledge of the distance between the source and the film. Lattice parameters are then calculated from the ratio L_1/L_2 of the distances L_1 and L_2 between pairs of the sections. Heise (1962) used this method for cubic crystals in the simplest case, in which the cone axes are perpendicular to the film (symmetrical method). His idea had been generalized by Gielen *et al.* (1965), who formed a theory of the lens in the case of arbitrarily situated diffracting planes and arbitrary wavelengths, but for cubic crystals only. Lutts (1968) derived suitable formulae for cubic, tetragonal, and hexagonal systems by combining the ratio L_1/L_2 with interplanar spacings and lattice parameters.

Several features of the Kossel pattern may be jointly taken into account for its interpretation and lattice-parameter determination. Hanneman, Ogilvie & Modrzejewski (1962) used the conic sections formed by $K\alpha_1$ and $K\beta$ radiation and the lens figures.

Lang & Pang (1995) observed and analysed fine streaks in the transmitted pseudo-Kossel patterns caused by both the coherent multiple diffraction and the enhanced Borrmann (anomalous) transmission. As they have found, these fine-scale features of a few arcseconds in angular width, which add markers to the broad-line Kossel patterns, may be taken into account in accurate lattice-parameter measurements.

(iii) Determination of lattice parameters by means of techniques utilizing a highly divergent beam becomes much more complicated if there is no information about indices and the *crystal system*. Such a problem arises in the case when the crystal system of the specimen is *unknown* or when the lattice is deformed. Then, a three-dimensional array of intersecting cones with a common vertex should be taken into consideration.

It is difficult to dispense with the data concerning the camera geometry. However, the distance of X-ray source from the film center may be eliminated in calculations when the *multiple-exposure technique* is used. This technique, introduced by Ellis *et al.* (1964) for back-reflection patterns, depends on recording the Kossel lines at variable but controlled distances from the focus to the film (Fig. 5.3.2.5), so that three or more positions of a cone generator can be established and, as a consequence, the cone axis and the semivertical angle are determined. The interpretation of the multiple-exposure pictures is based, in principle, on the coordinates of general points of lines rather than on their special properties.

The basic formula valid for all the methods applying the Kossel idea,

$$\mathbf{P}\cdot\mathbf{N} = \cos\alpha, \qquad (5.3.2.10)$$

where $\mathbf{P}$ is the unit vector defining the cone generator and $\mathbf{N}$ is the axial direction of a cone, can now be fully utilized, since multiple-exposure techniques make possible accurate calculations of direction cosines. Lengthy and complicated calculations resulting from measurements performed on the film may be realized by means of a computer. A suitable program is given by Fischer & Harris (1970). This technique has also been applied and developed by Slade, Weissmann, Nakajima & Hirabayashi (1964), Shrier, Kalman & Weissmann (1966), Newman & Weissmann (1968), Schneider & Weik (1968), Fischer & Harris (1970), Newman & Shrier (1970), Aristov, Shekhtman & Shmytko (1973), and Soares & Pimentel (1983) for both the back-reflection and the transmission region.

As mentioned above, the Kossel lines occurring in the back-reflection region are similar to ellipses; they can be described using an equation of the fourth degree (Newman, 1970). In general, the major axes of such ellipse-shaped figures have been

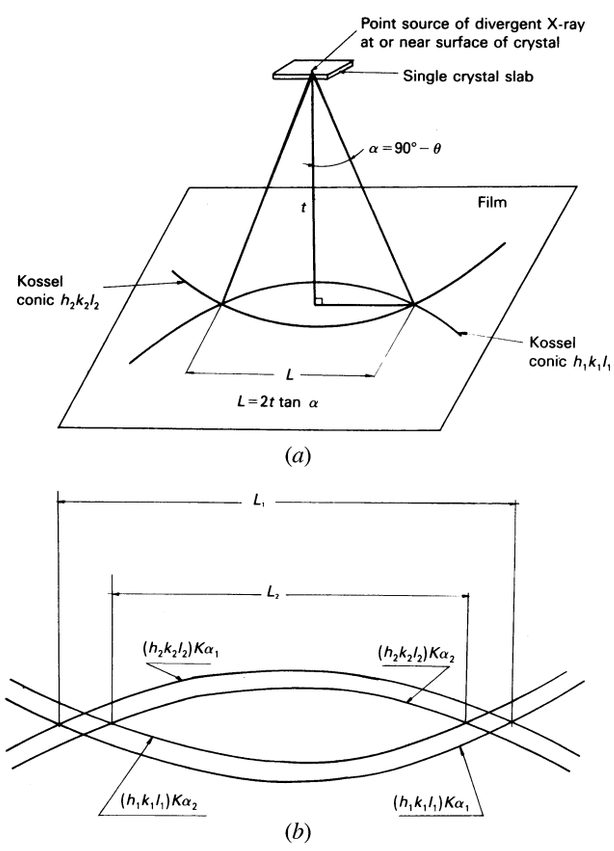

Fig. 5.3.2.4. Lens-shaped figures formed by pairs of intersecting conics. (*a*) Schematic representation of the method of Heise (1962). (*b*) The use of the $K\alpha_{1,2}$ doublet for precise and accurate lattice-parameter determination.

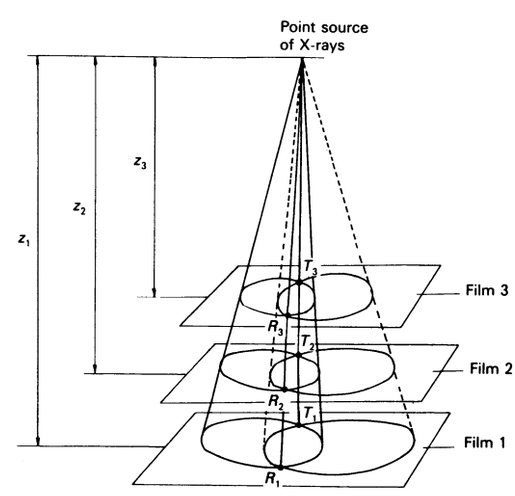

Fig. 5.3.2.5. Schematic representation of the multiple-exposure technique (after Fischer & Harris, 1970).

Copyright © 2006 International Union of Crystallography

references